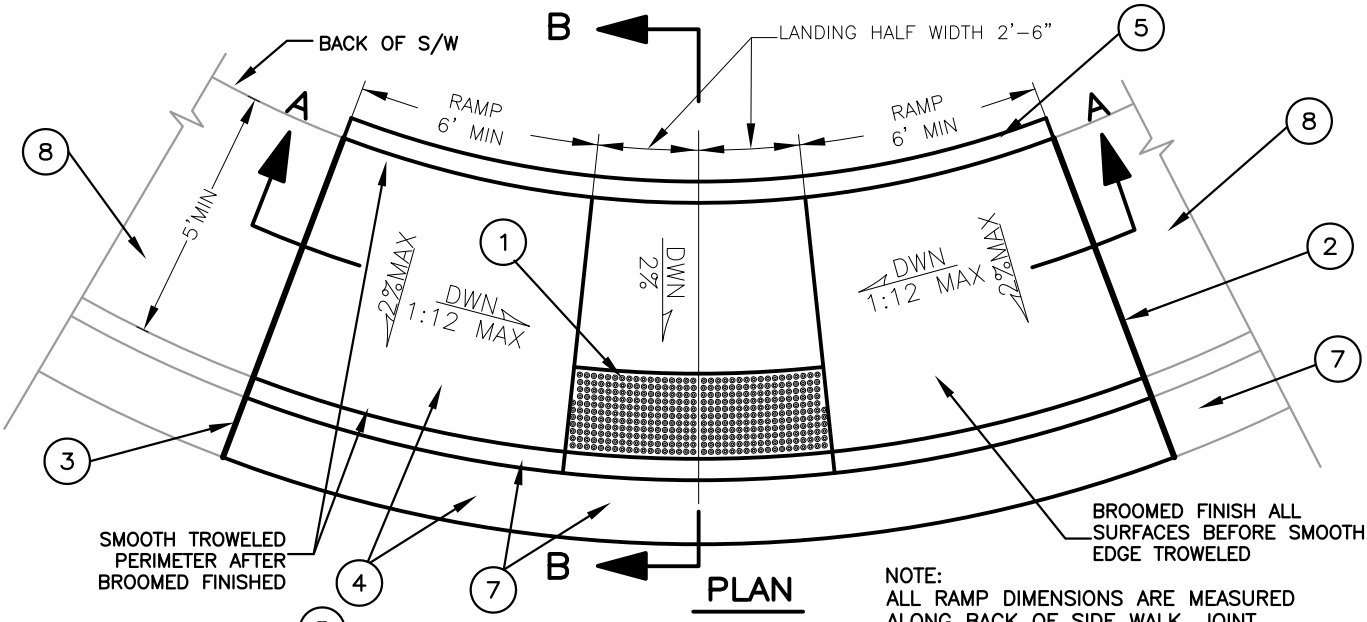

PLAN

NOTE:
ALL RAMP DIMENSIONS ARE MEASURED ALONG BACK OF SIDE WALK. JOINT LINES ARE RADIAL FROM CENTER.

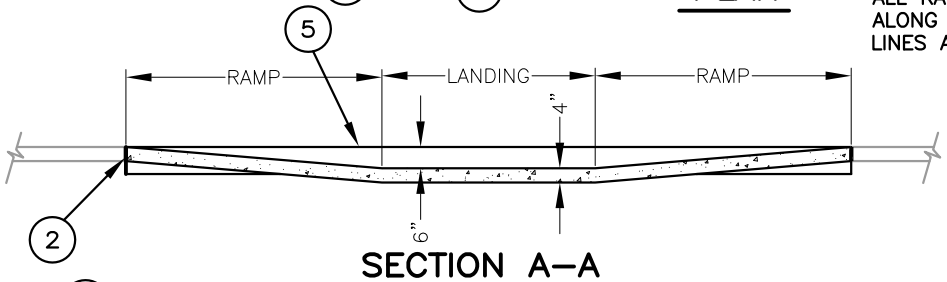

SECTION A–A

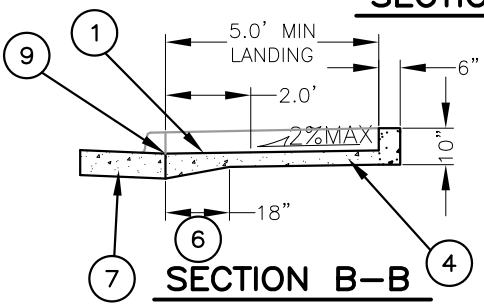

SECTION B–B

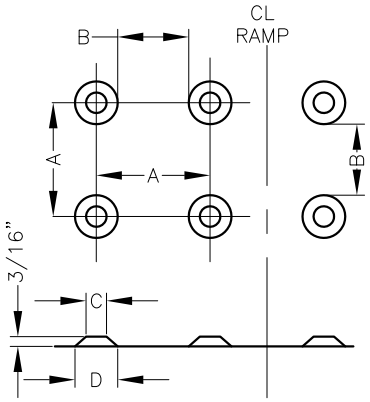

	MIN.	MAX.
A	1 5/8"	2 3/8"
B	5/8"	1 1/2"
C	7/16"	3/4"
D	7/8"	1 7/16"

DETECTABLE WARNING PATTERN

NOTES: (#)

1 DETECTABLE WARNING PATTERN AREA SHALL BE YELLOW IN COMPLIANCE WITH WSDOT/APWA STANDARD SPEC SECTION 8–14.3(3).

2 CURB RAMPS SHALL NOT BE POURED INTEGRAL WITH SIDEWALK AND SHALL BE ISOLATED FROM ADJACENT SIDEWALK BY A 3/8" FULL DEPTH EXPANSION JOINT.

3 GUTTER SECTION AT CURB RAMP SHALL NOT BE POURED INTERGAL WITH ADJACENT GUTTER SECTIONS AND SHALL BE ISOLATED BY A 3/8" FULL DEPTH EXPANSION JOINT.

4 CURB RAMP AND GUTTER SECTION AT CURB RAMP MAY BE POURED AS AN INTERGAL SECTION.

5 6"W X 10"H X 17'/18'L POURED IN PLACE CONCRETE CURB. INTERGAL WITH RAMP.

6 THICKEN EDGE TO FULL DEPTH OF ADJACENT CURB SECTION.

7 TYPE A–1 INTEGRAL CURB AND GUTTER PER CITY STD DWG 305A.

8 FOR RETROFIT INSTALLATION SAWCUT AND REMOVE EXISTING SIDEWALK TO FIRST EXISTING JOINT EITHER SIDE OF NEW RAMP. SAWCUT AND REMOVE EXISTING CURB AND GUTTER SECTION AS REQUIRED. SAWCUT EXISTING PAVEMENT AS REQUIRED FOR FORMING OF NEW CURB AND GUTTER. PATCH PAVEMENT AS REQUIRED.

9 FLUSH WITH GUTTER (NO LIP PERMITTED)